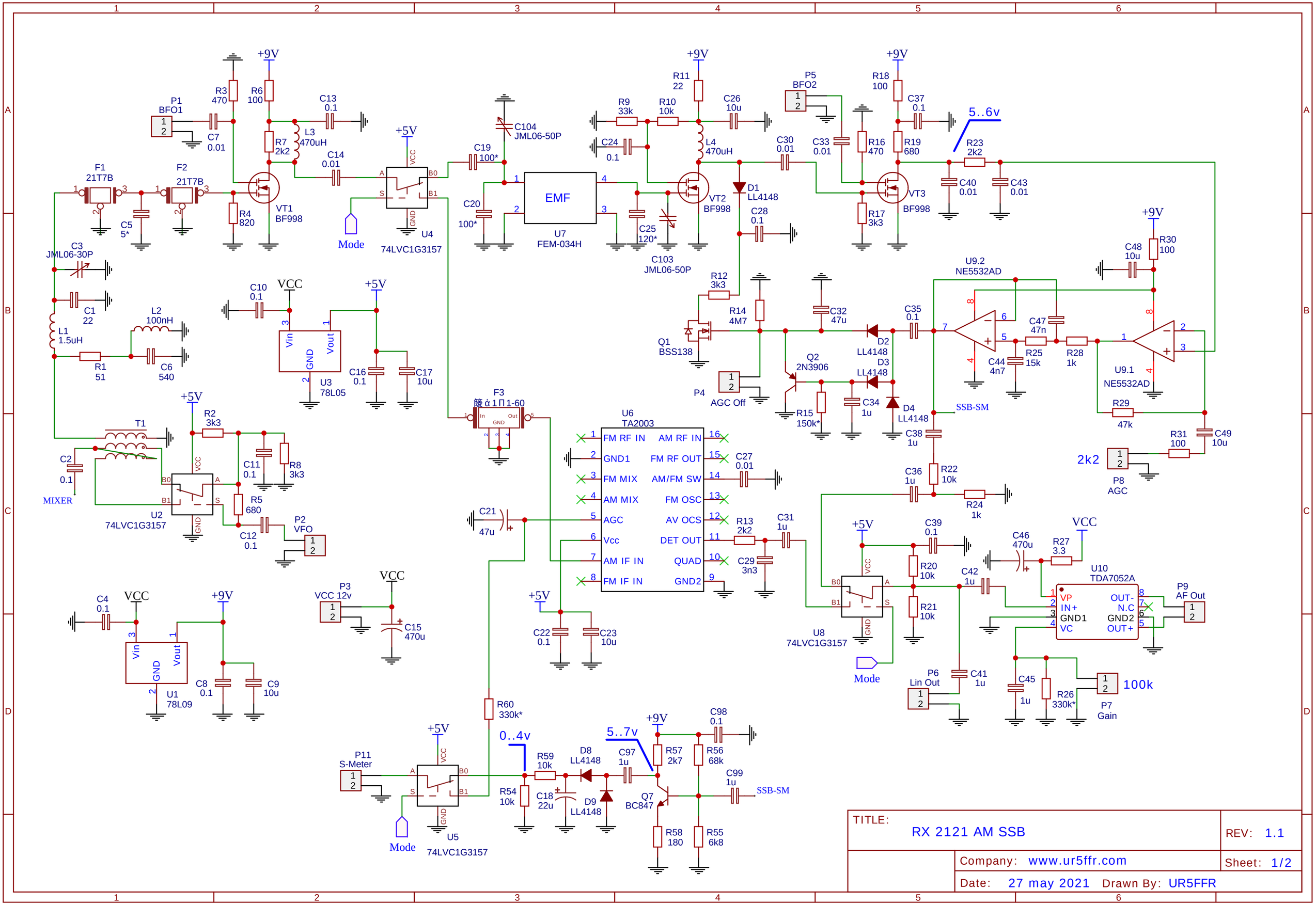

TITLE: RX 2121 AM SSB

REV: 1.1

Company: www.ur5ffr.com

Sheet: 1/2

Date: 27 may 2021 Drawn By: UR5FFR

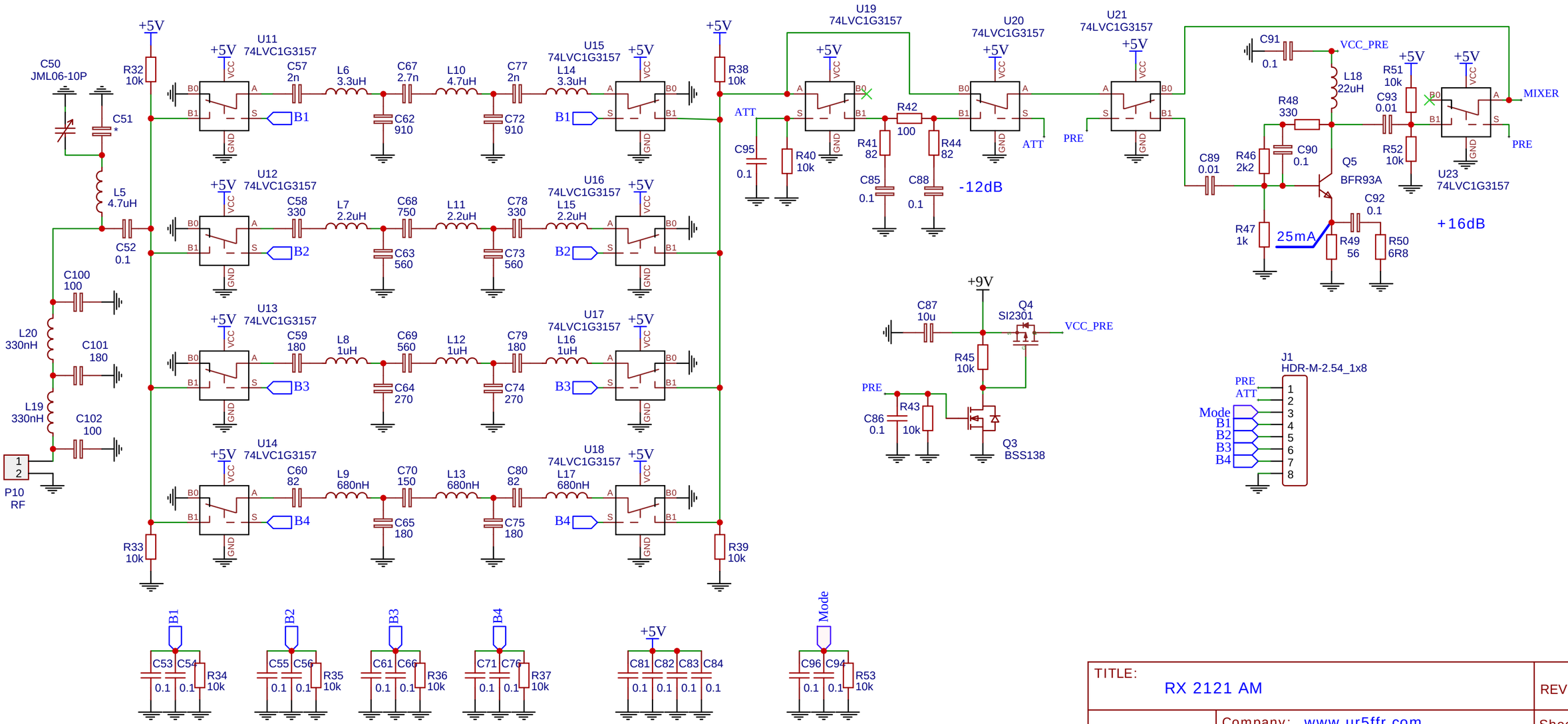

TITLE: RX 2121 AM	REV: 1.1
Company: www.ur5ffr.com	Sheet: 2/2
Date: 27 may 2021 Drawn By: UR5FFR	

EasyEDA